TEL 905.695.2055 **toll free** 1.800.660.5391
FAX 905.695.2056 **toll free** 1.800.660.5390
33 West Beaver Creek Road Richmond Hill, Ontario Canada L4B 1L8

34175, OUTDOOR LED WALL MOUNT

PRODUCT DETAILS

No.	:	34175-019
Product Color	:	MARINE GREY
Width	:	9.75"
Height	:	4.75"
Ext	:	5.5"
Weight	:	3.8lbs

LIGHT SOURCE DETAILS

Light Source Type	:	INTEGRATED LED
Input Voltage	:	120V
Bulb Voltage	:	120V
Socket Type	:	LED
Total Wattage	:	18W
Initial Lumens	:	860lm
Kelvin	:	3000K
CRI	:	80
Dimmable	:	No

OPTIONS AVAILABLE

ITEM NO.	FINISH	SHADE
34175-019	MARINE GREY	
34175-026	GRAPHITE GREY	

TECHNICAL DETAILS

IP Rating	:	54
Location	:	WET
Approval	:	c UL us LISTED
Title 24	:	Yes

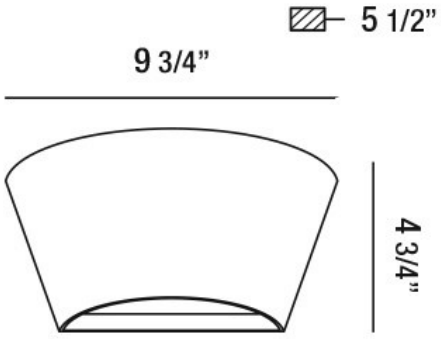

PROJECT INFORMATION

Job Name: Date: Type:

Comments: