PRODUCT:	Vitoro Vanity Matt Black	PROJECT:	VAN-VI-MB	DATE:	2021-12-13

DESCRIPTION

FEATURES

IP RATING:	DAMP
WEATHER RESISTANT POWDER COATING:	N/A
DAYLIGHT SENSOR:	N/A
FINISHES:	Matte Black/Chrome
DIMMABLE:	YES
5-YEAR WARRANTY:	YES
LIGHT SOURCE:	Integrated LED

SPECIFICATIONS

COLOR TEMPERATURE (K):	3000K
WATTAGE (W):	21
VOLTAGE (V):	120v
CRI:	80+
DIMMING:	Triac
FINISHES:	Black/Chrome
PRODUCT DIMENSION:	D: [redacted] L: 27" W: 4.25 H: 4.33
RATED LIFE (Y):	50,000 Hours
CONSTRUCTION:	Steel & POLYCARBONATE
MOUNTING:	INCLUDED

CERTIFICATIONS

TECHNICAL DRAWING

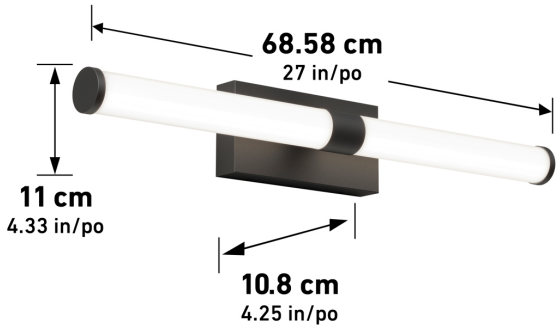

Model & Size	CRI	Kelvins	Watts	LED Lumens	Delivered
VAN-VI-MB	80+	3000k	21		2200 Lm

NOTES:

ETL certified

STAMP

Artika reserves the right to modify its products from time to time as part of our continuous improvement program.

Service & products for professionals.
Service & produits pour professionnels.
Servicio & productos para profesionales.

+1-866-661-9606 ***opt. 2***
pro@artika.com
www.artika.com/pro

artika pro
1756 50th ave, Lachine, QC H8T 2V5, Canada